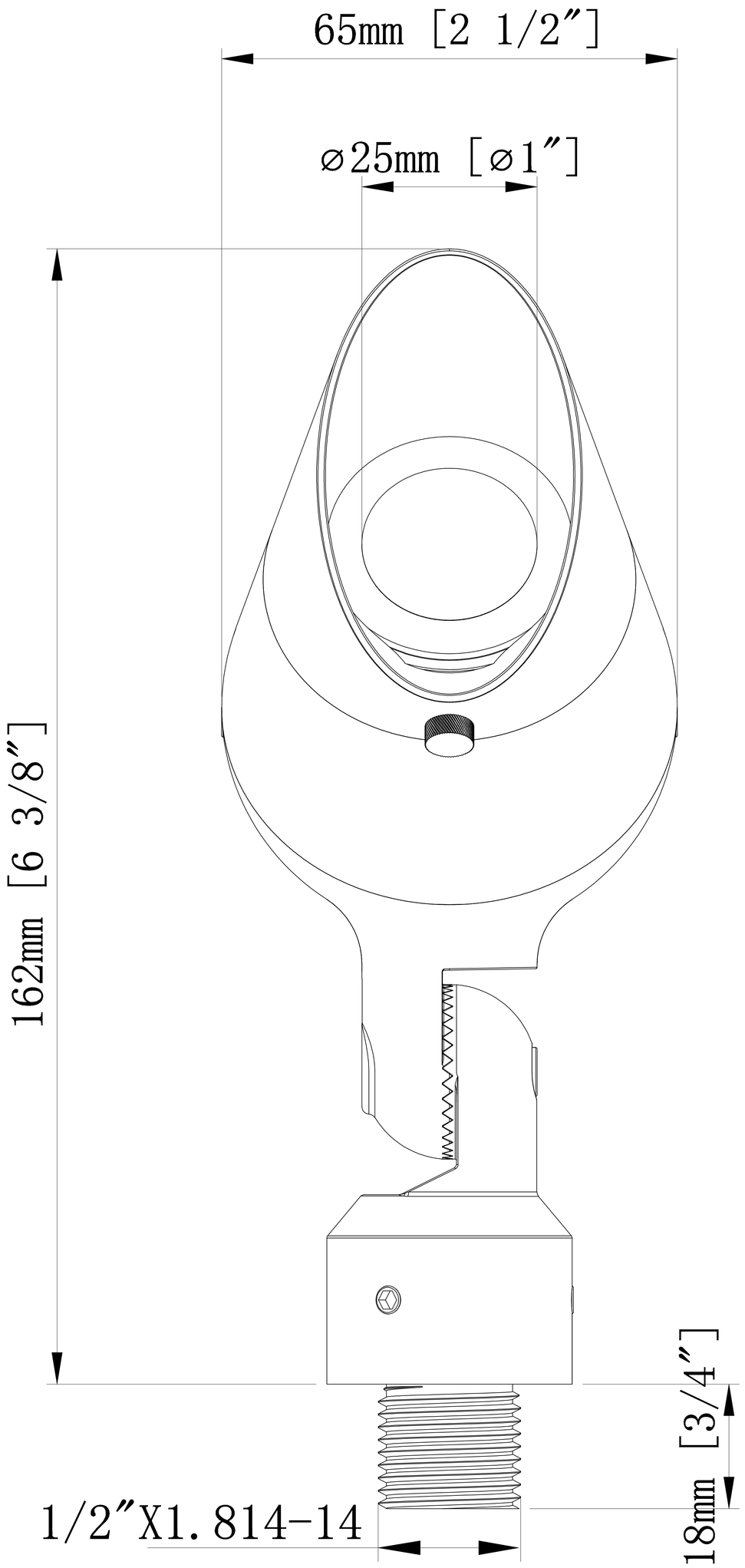
65mm [2 1/2″]
⌀25mm [⌀1″]
162mm [6 3/8″]
18mm [3/4″]
1/2″X1.814-14

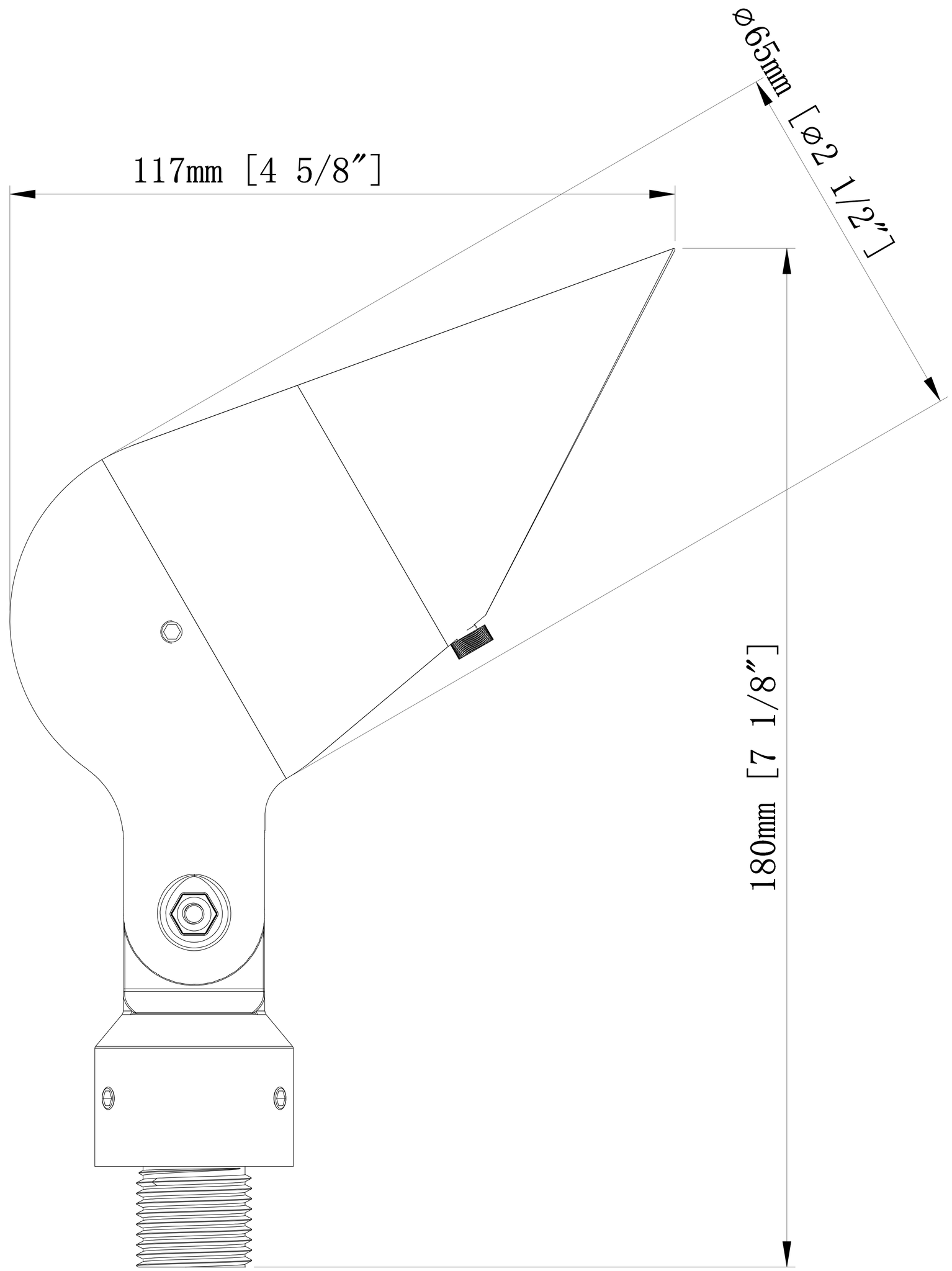
⌀65mm [⌀2 1/2″]
117mm [4 5/8″]
180mm [7 1/8″]